JOSPER CHARCOAL BROILER OVEN HJX

HJX-25-L

Josper is an elegant combination of a grill and an oven in a single machine. It works 100% with charcoal. A unique closed barbecue design. Different levels of grilling. Flexible and robust, easy to use, with a front opening door system. Vent system for temperature control.

By bringing the added value that comes from the firewood (charcoal) to the raw material, we obtain those flavours of yesterday, as well as a perfect texture and juiciness. By combining the functions of an oven and grill, we can work at high temperatures, sealing the product, smoking and grilling at the same time. These results are unique, and make the Josper Charcoal Oven a piece of equipment that is also unique.

ACCESSORIES NOT INCLUDED

1 Grill rack · Firebreak · Firebreak hat

TECHNICAL INFORMATION

Recommended for ±	80 diners	
Fire up time	30 min average	
Josper charcoal daily consumption	10 to 12 kg	22 to 26.5 lb
Performance	9h	
Production per hour	60 kg average	132 lb average
Broiling temperature	250 to 350 ºC	482 to 662 ºF
Grill rack capacity in GN trays	1xGN1/1	
Nominal heat output	8,8 kW	11.8 hp
Flue gas mass flow	19,36 g/s	0.68 oz/s
Net weight	189 kg	416.7 lb

INSTALLATION

Clearance with non-flammable equipment	100 mm	4 in
Clearance with flammable equipment	300 mm	12 in
Exhaust rate	2800 m3/h	1648 cfm

BUNDLES: SIZES AND WEIGHTS

Sizes bundle 1	760 x 750 x 850 mm	30 x 29 1/2 x 33 1/2 in
Gross weight bundle 1	162 kg	357.1 lb
Sizes bundle 2	760 x 750 x 890 mm	30 x 29 1/2 x 35 in
Gross weight bundle 2	49 kg	108 lb

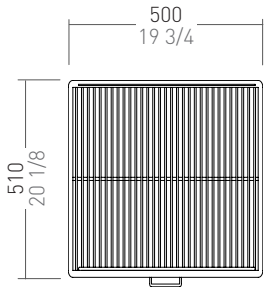

x2

[mm / in]

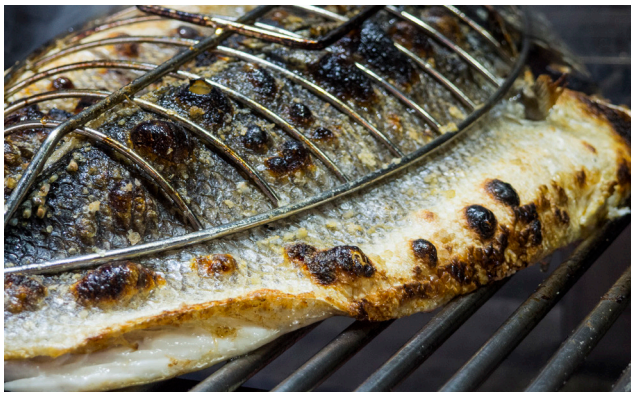

Ed.10.2020 - Josper reserves the right to make modifications to catalogues, pricelists and promotional material according to the development and improvements applied to its equipment.

JOSPER CHARCOAL EQUIPMENT
THE MIDDLEBY CORPORATION

JOSPER S.A.U. Gutenberg, 11
08397 Pineda de Mar - Barcelona - Spain
T +34 93 767 15 16
josper@jospergrill.com
www.jospergrill.com

JOSPER CHARCOAL BROILER OVEN HJX

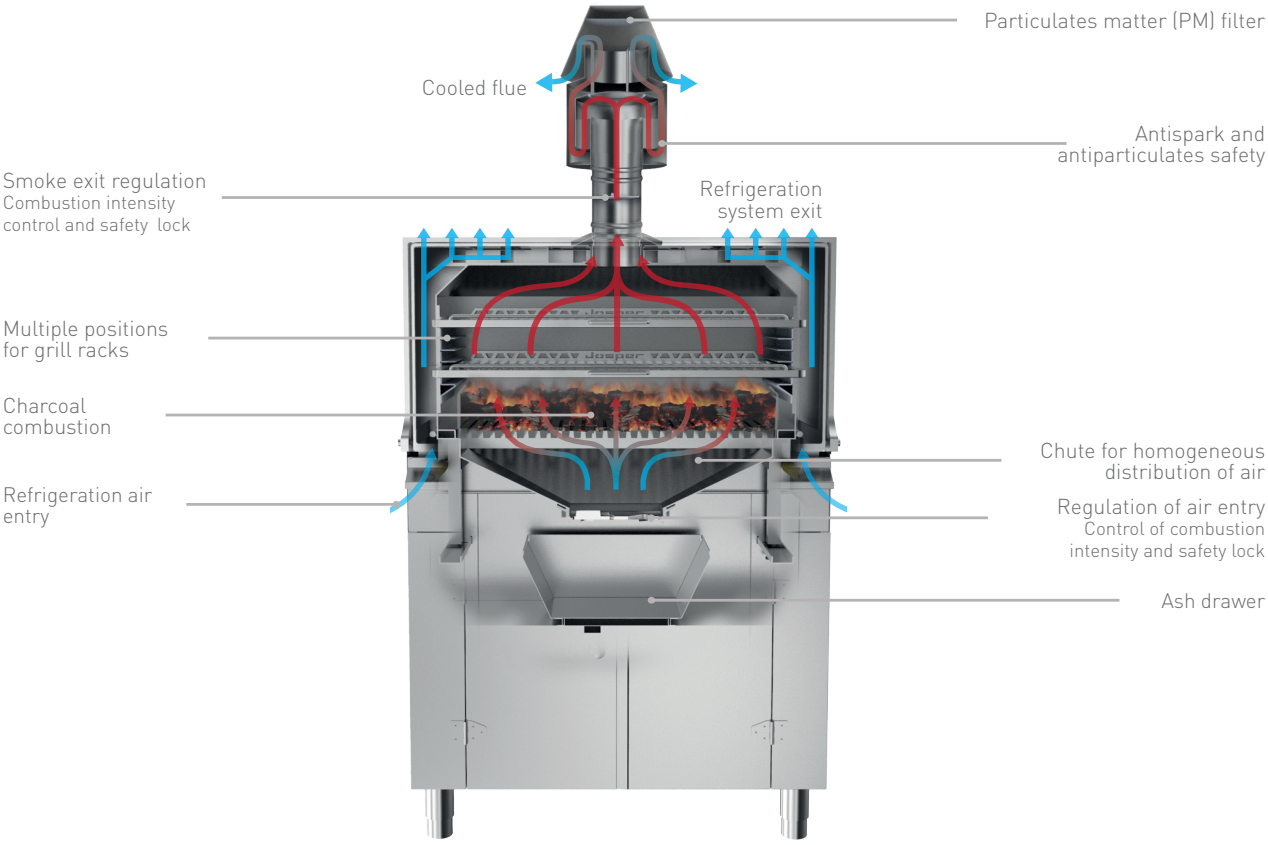

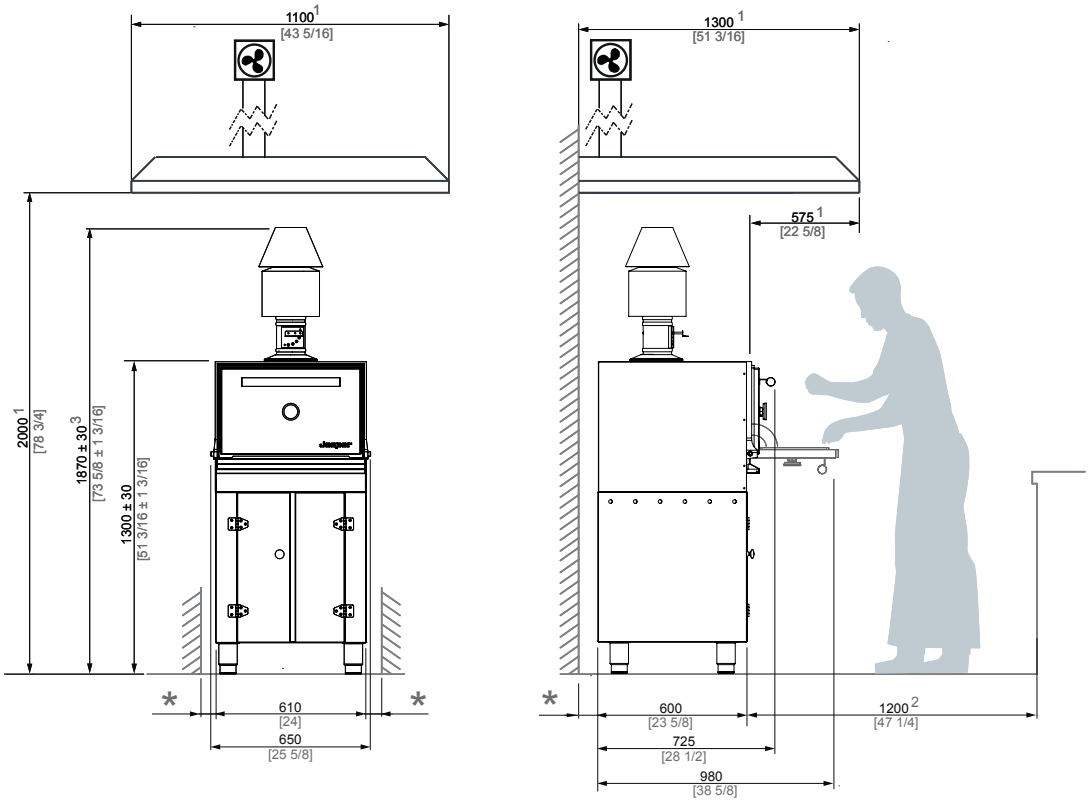

* MINIMUM DISTANCE TO FLAMMABLE ELEMENTS: 300 mm [12 in] / RECOMMENDED DISTANCE TO ANOTHER ELEMENTS: 100 mm [4 in]

1 RECOMMENDED HOOD'S MINIMUM DIMENSIONS

2 RECOMMENDED CHEF'S WORKING SPACE

3 THIS DISTANCE MAY BE MODIFIED BY THE SMOKE OUTLET SET CONFIGURATION.

[mm / in]

Josper® CHARCOAL EQUIPMENT
THE MIDDLEBY CORPORATION

JOSPER S.A.U. Gutenberg, 11
08397 Pineda de Mar - Barcelona - Spain
T +34 93 767 15 16
josper@jospergrill.com
www.jospergrill.com