JOSPER CHARCOAL BROILER OVEN HJX

TECHNICAL INFORMATION

Recommended for ±	120 diners	
Fire up time	35 min average	
Charcoal daily consumption	12 to 16 kg	26.5 to 35 lb
Performance	9h	
Production per hour	90 kg average	192 lb average
Broiling temperature	250 to 350 ºC	482 to 662 ºF
Grill rack capacity in GN trays	2xGN1/1	
Nominal heat output	7,4 kW	9.92 hp
Flue gas mass flow	15,39 g/s	0.54 oz/s
Net weight	230 kg	507.1 lb

INSTALLATION

Recommended installation height	550 mm	21 5/8 in
Clearance with non-flammable equipment	100 mm	4 in
Clearance with flammable equipment	300 mm	12 in
Exhaust rate	3500 m3/h	2060 cfm

BUNDLES: SIZES AND WEIGHTS

Sizes bundle	1010 x 750 x 960 mm	39 3/4 x 29 1/2 x 37 3/4 in
Gross weight bundle	248 kg	546.7 lb

HJX-45-M

Josper is an elegant combination of a grill and an oven in a single machine. It works 100% with charcoal. A unique closed barbecue design. Different levels of grilling. Flexible and robust, easy to use, with a front opening door system. Vent system for temperature control.

By bringing the added value that comes from the firewood (charcoal) to the raw material, we obtain those flavours of yesterday, as well as a perfect texture and juiciness. By combining the functions of an oven and grill, we can work at high temperatures, sealing the product, smoking and grilling at the same time. These results are unique, and make the Josper Charcoal Oven a piece of equipment that is also unique.

ACCESSORIES NOT INCLUDED

1 Grill rack · Firebreak · Firebreak hat

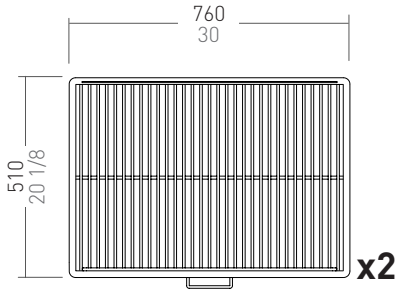

[mm / in]

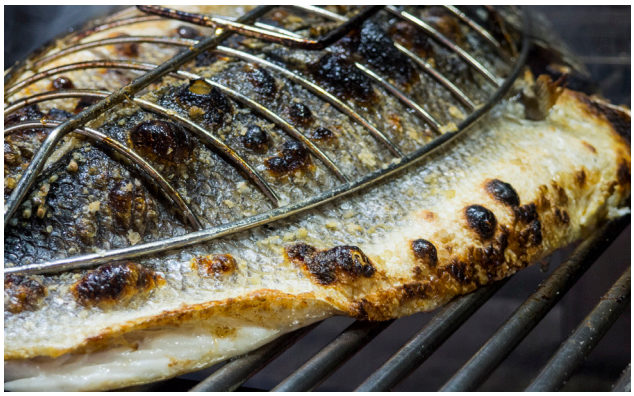

Ed.10.2020 - Josper reserves the right to make modifications to catalogues, pricelists and promotional material according to the development and improvements applied to its equipment.

Josper CHARCOAL EQUIPMENT
THE MIDDLEBY CORPORATION

JOSPER S.A.U. Gutenberg, 11
08397 Pineda de Mar - Barcelona - Spain
T +34 93 767 15 16
josper@jospergrill.com
www.jospergrill.com

JOSPER CHARCOAL BROILER OVEN HJX

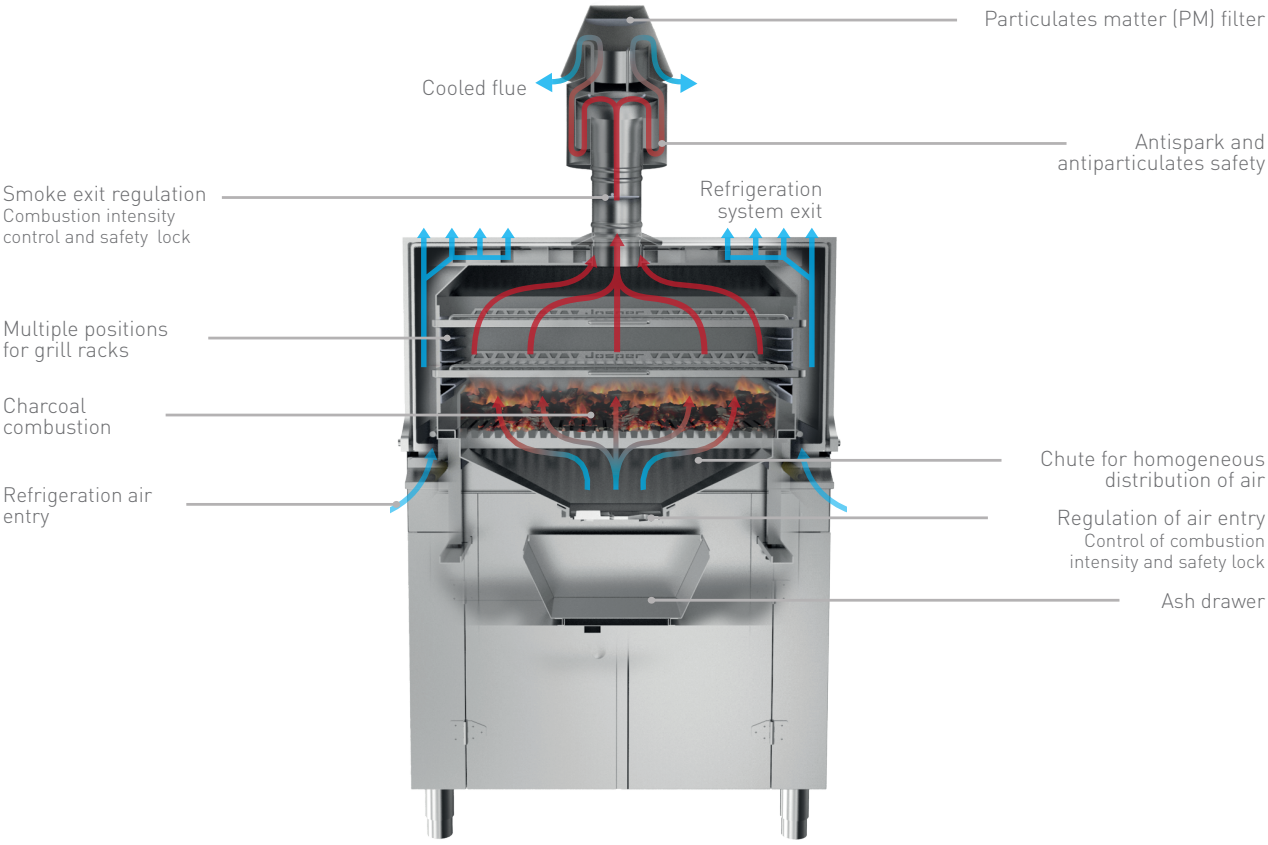

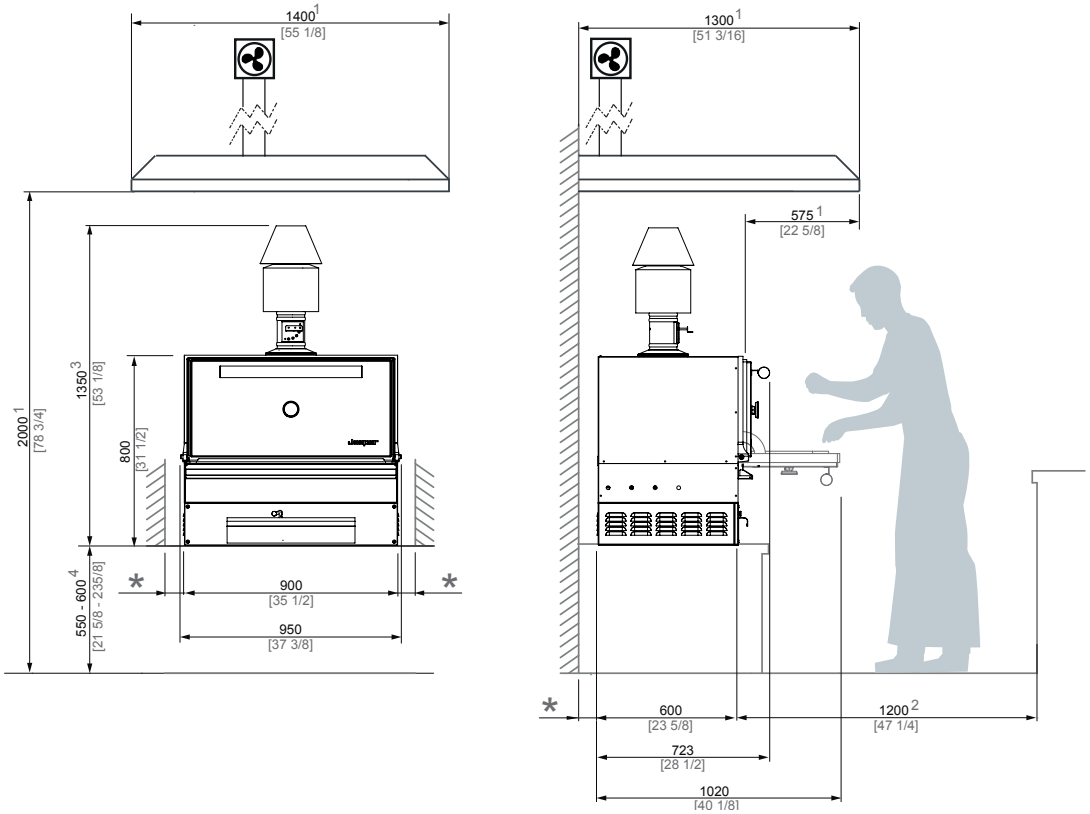

* MINIMUM DISTANCE TO FLAMMABLE ELEMENTS: 300 mm [12 in] / RECOMMENDED DISTANCE TO ANOTHER ELEMENTS: 100 mm [4 in]

1 RECOMMENDED HOOD'S MINIMUM DIMENSIONS

2 RECOMMENDED CHEF'S WORKING SPACE

3 THIS DISTANCE MAY BE MODIFIED BY THE SMOKE OUTLET SET CONFIGURATION.

4 RECOMMENDED INSTALLATION HEIGHT.

[mm / in]

Josper CHARCOAL EQUIPMENT
THE MIDDLEBY CORPORATION

JOSPER S.A.U. Gutenberg, 11
08397 Pineda de Mar - Barcelona - Spain
T +34 93 767 15 16
josper@jospergrill.com
www.jospergrill.com